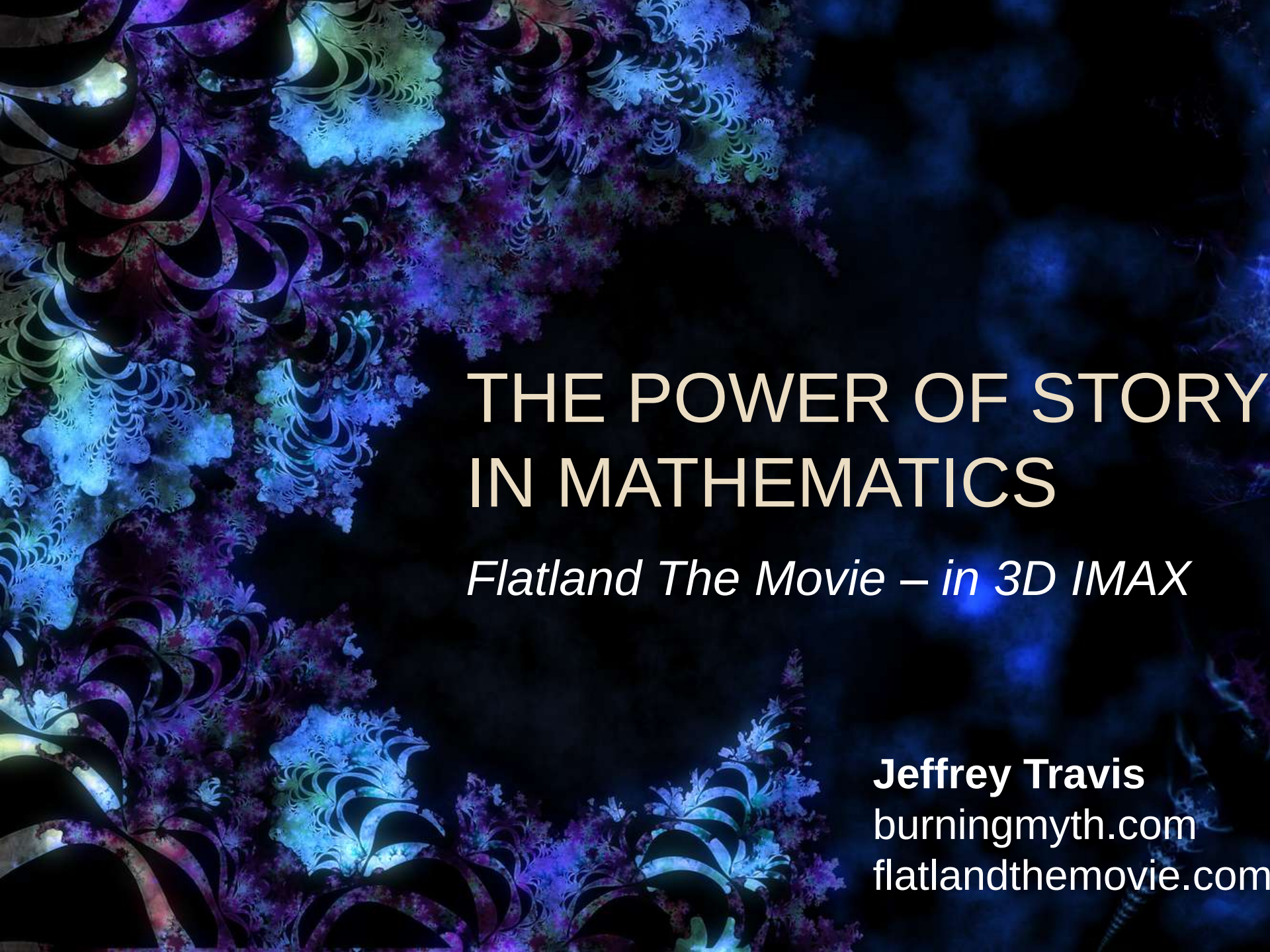

THE POWER OF STORY IN MATHEMATICS

Flatland The Movie – in 3D IMAX

Jeffrey Travis
burningmyth.com
flatlandthemovie.com

THE POWER OF STORY IN MATH

1. WHY WE NEED MORE MATH STORIES
2. THE STORY OF FLATLAND
3. THE MATH OF 3-D FILMS

A STORY IS THE SHORTEST DISTANCE BETWEEN A HUMAN BEING AND TRUTH.

- Anthony de Mello

IMAGINATION
+
MATH =

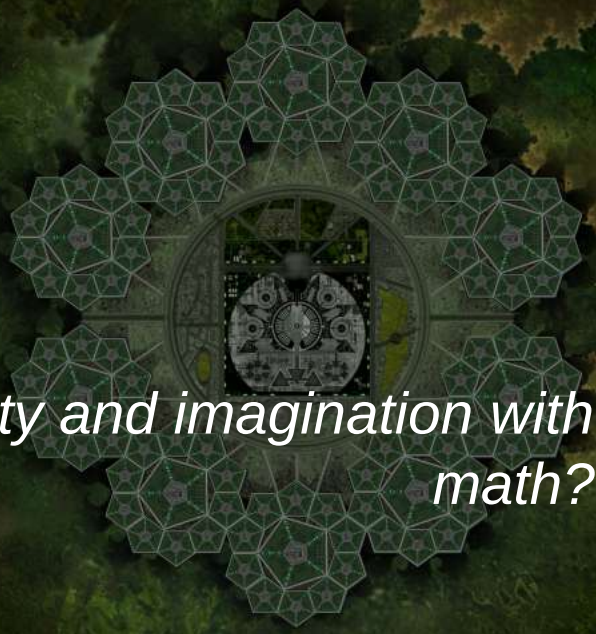

How to best inspire creativity and imagination with math?

Stories make math matte

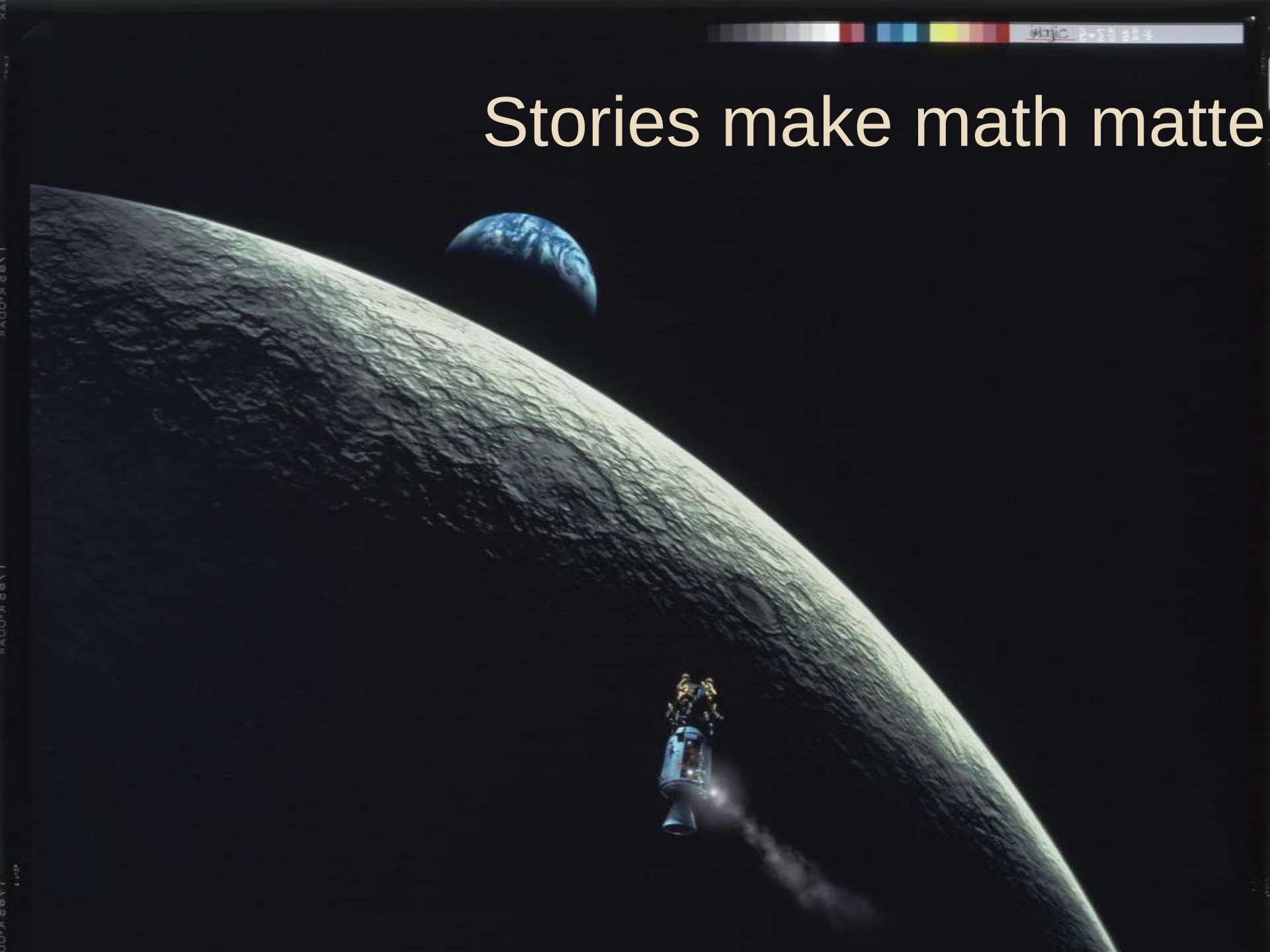

The Remarkable Story of Fermat's Last Theorem

- $x^n + y^n = z^n$
- If x, y, z are integers, there are
  - no solutions for n >2

"I have discovered a truly remarkable proof which this margin is too small to contain."
- Pierre de Fermat, 1630

The Engineer-Filmmaker

A personal story

The Story of **Flatland**

- Book by Edwin Abbott published in 1884
- Short film made in 1964 at Harvard
- Flatland the Movie on DVD released in 2007
- Flatland the Movie- IMAX 3D coming in 2012

Flatland, first edition

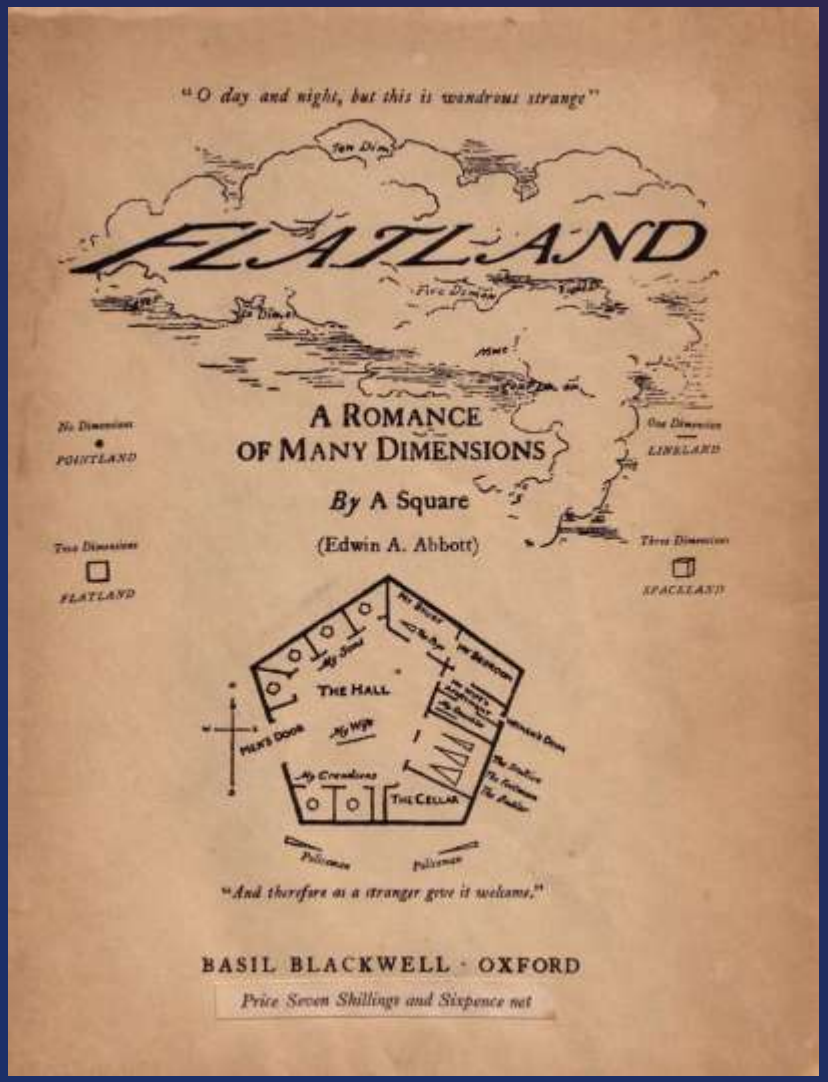

Flatland The Movie, DVD cover

FLATLAND THE MOVIE TRAILER

THE FLATLAND TEAM

JEFFREY TRAVIS

SETH CAPLAN

DANO JOHNSON

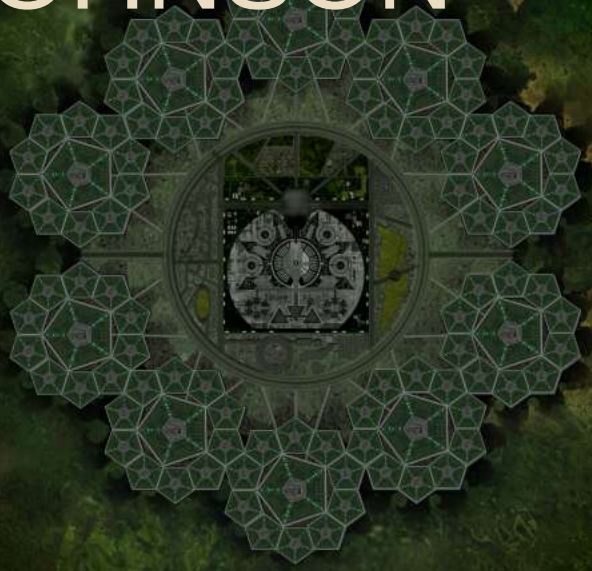

THE CAST OF FLATLAND SPEAKS

Geometry in Flatland

- Polygons, Regular and Irregular
- Solid Shapes
- Dimensions

Dimensions and Analogy

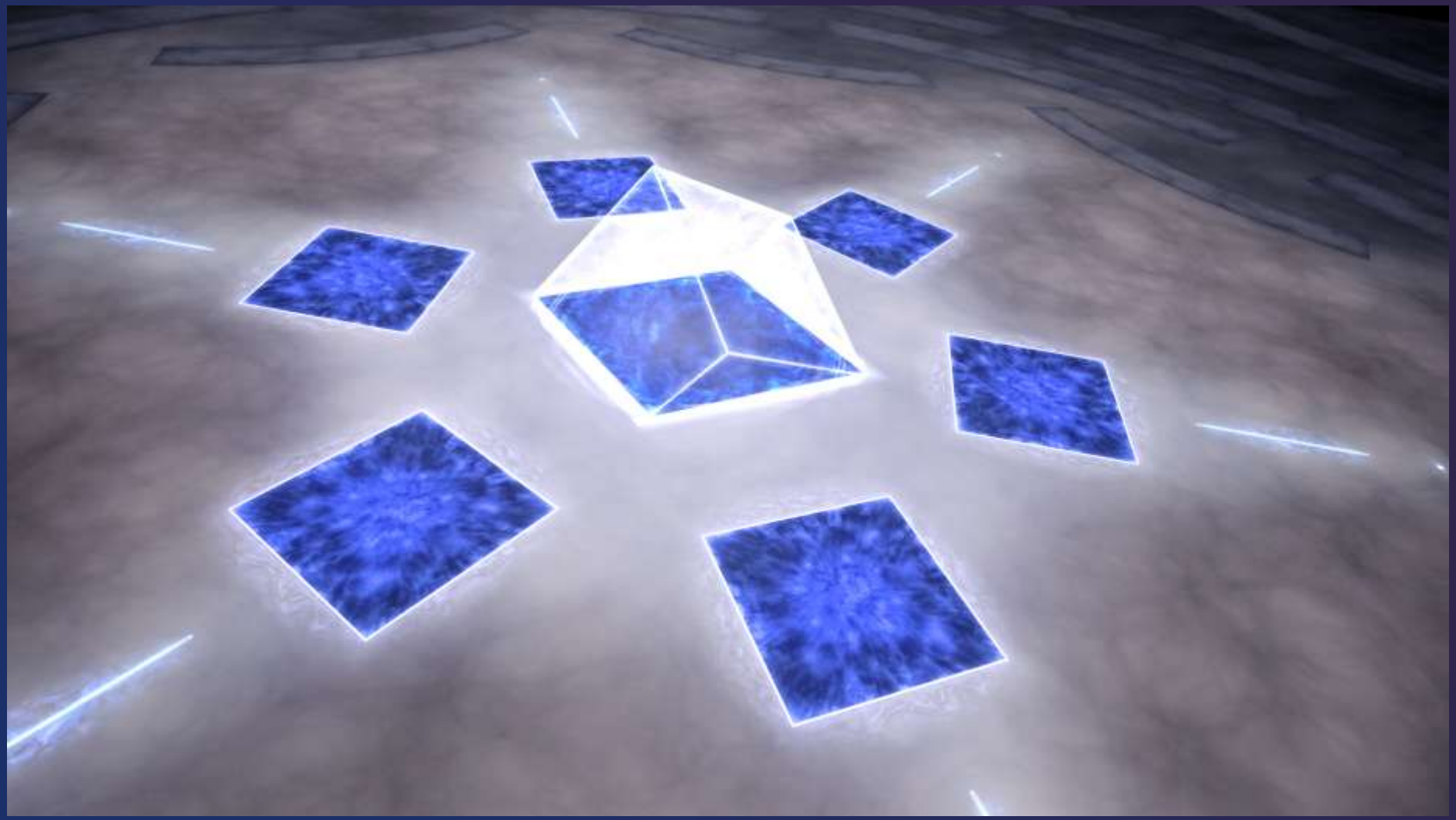

The Mathematics of 3D Movie

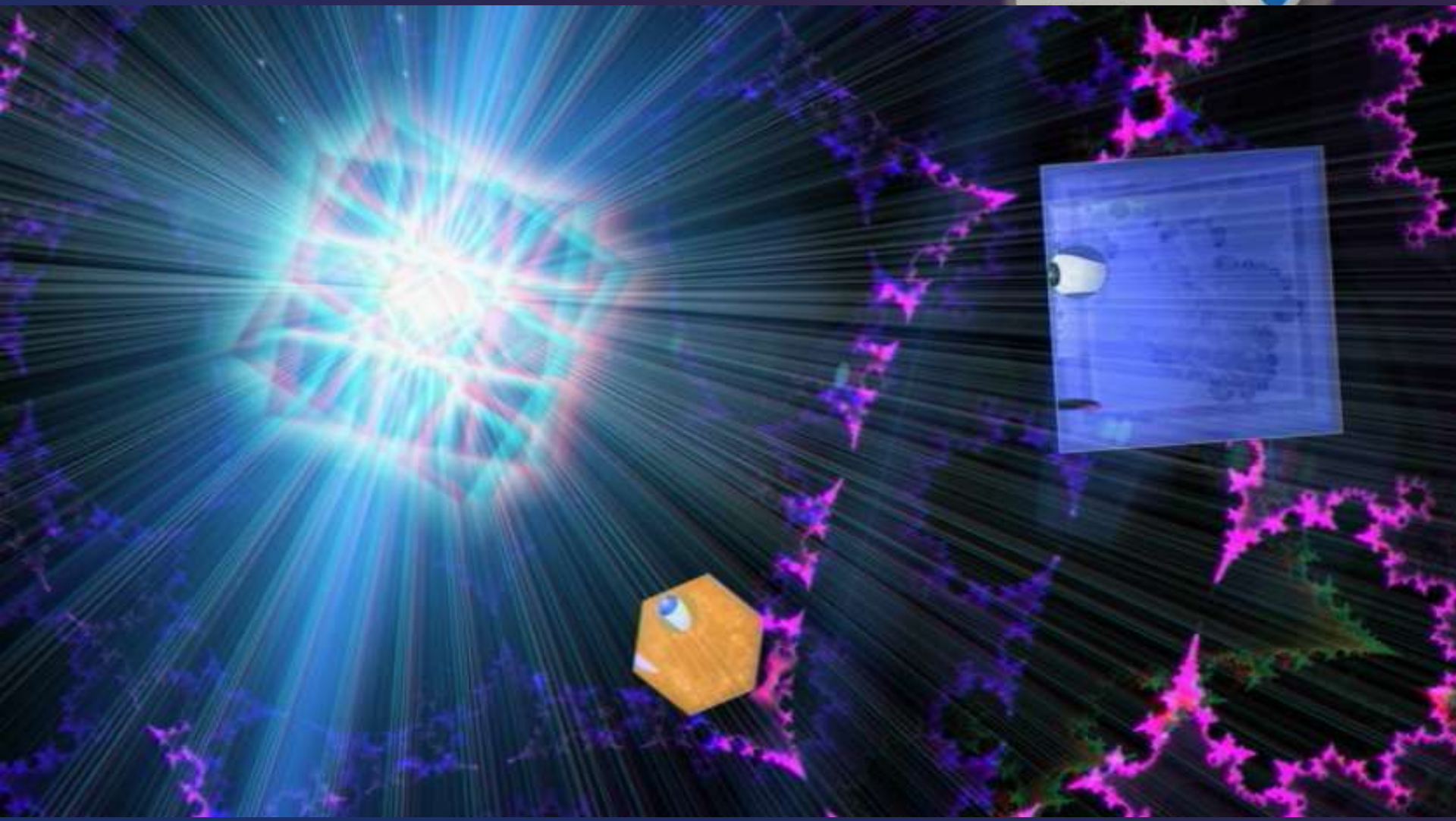

Stereoscopy (3D)

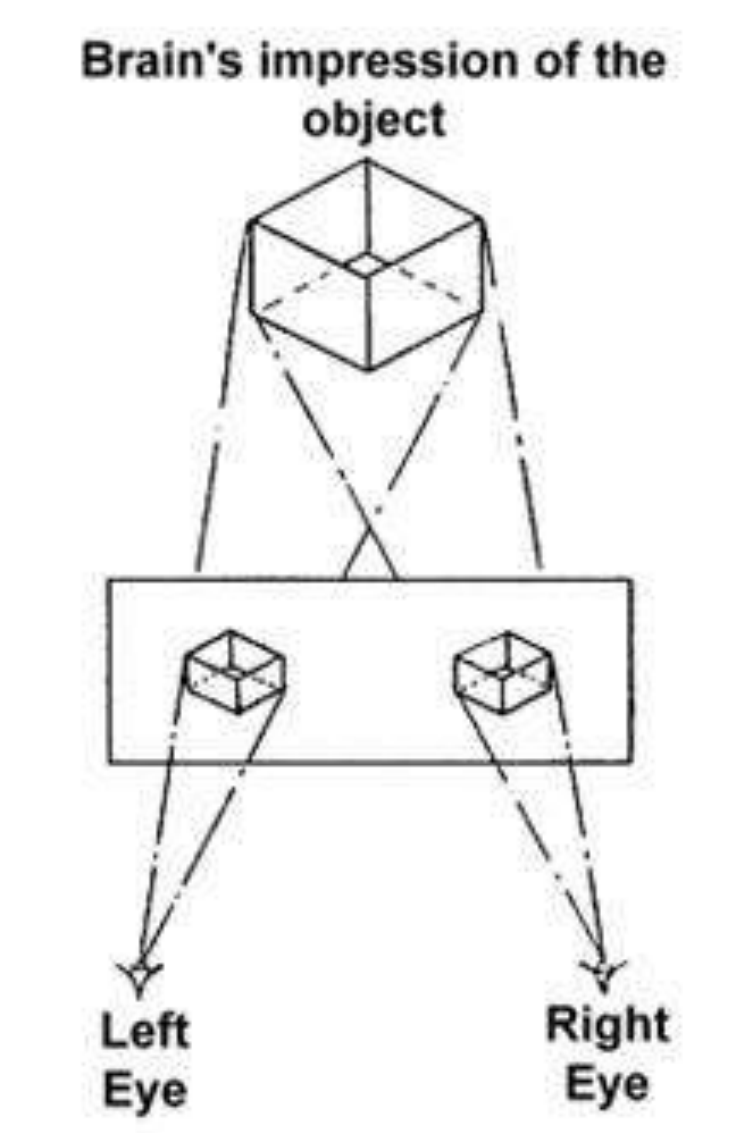

Convergence and Parallax

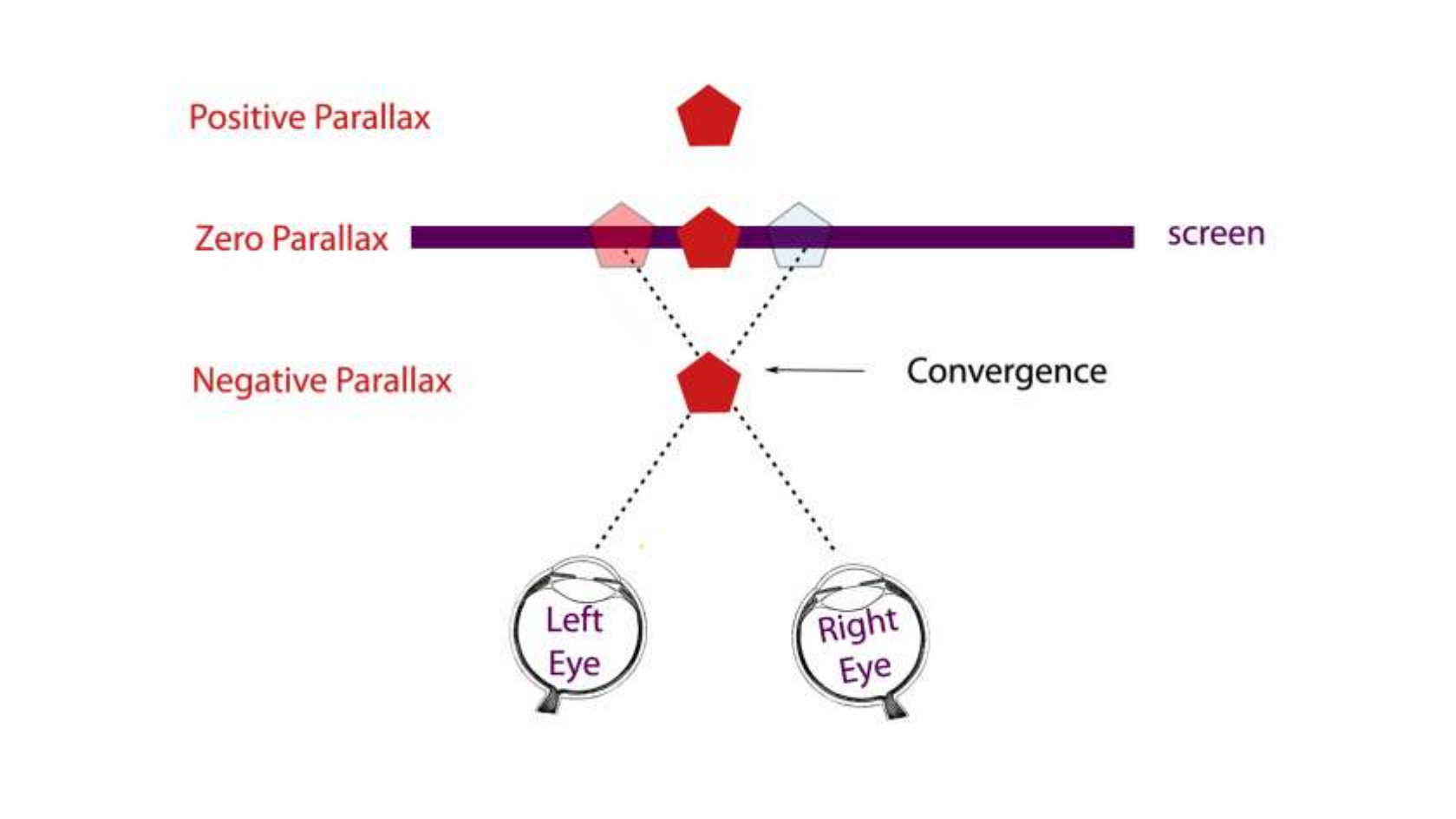

PARALLAX 3D DEMO

Put on 3D glasses

Stereoscopic Comfort Zone

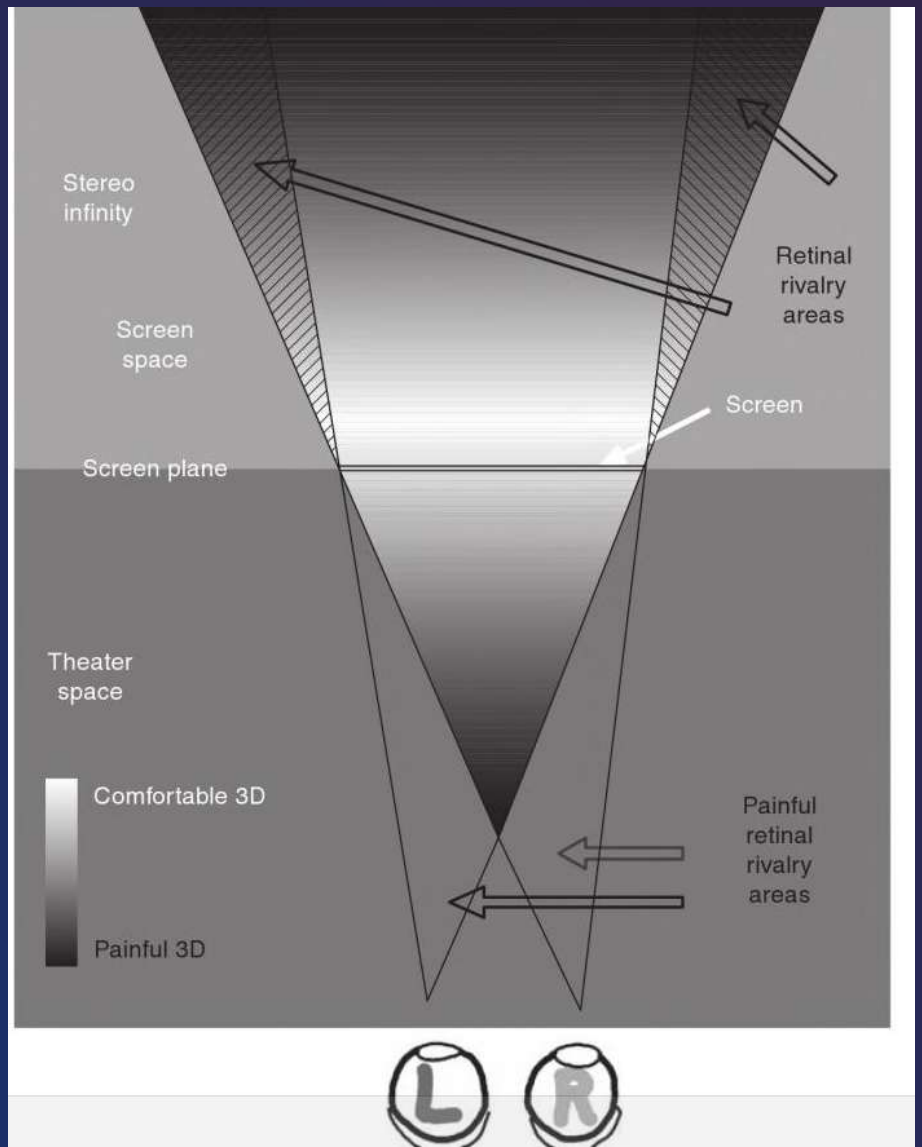

3D Filmmaking Math

- 3D Filmmaking Images represent a 7-dimensional space:
- [R, G, B, X, Y, t, p] is the vector form
  - R, G, B = red, green, blue pixel color values
  - X,Y = position on screen
  - t = time frame
  - p = parallax or separation of left / right eye
- All these factors interact with each other for the 3-D experience

How to Make Your Own Stereo 3-D images

- Use any camera (even a phone camera)
- Use free Stereomaker software (http://stereo.jpn.org/eng/stphmkr/)
- **Rule #1** – Take 2 pictures approx 2.5” apart
- **Rule #2** – “Rule of 1/30th”
  Inter-ocular distance = 1/30 • Convergence Distance
  - **Rule of thumb: <u>No object closer than approx 6’ to camera</u>**

Demo with iPhone camera

Move camera
2.5 inches

3-D Image created with Stereomaker

OBJECTS IN MOTION PICTURES

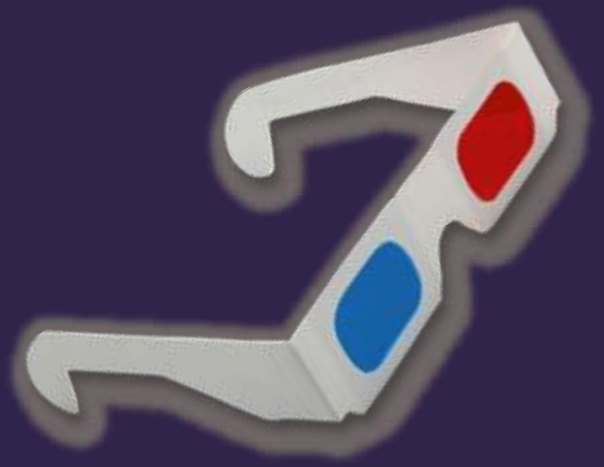

FLATLAND 3D IMAX CLIPS

Put on 3D glasses
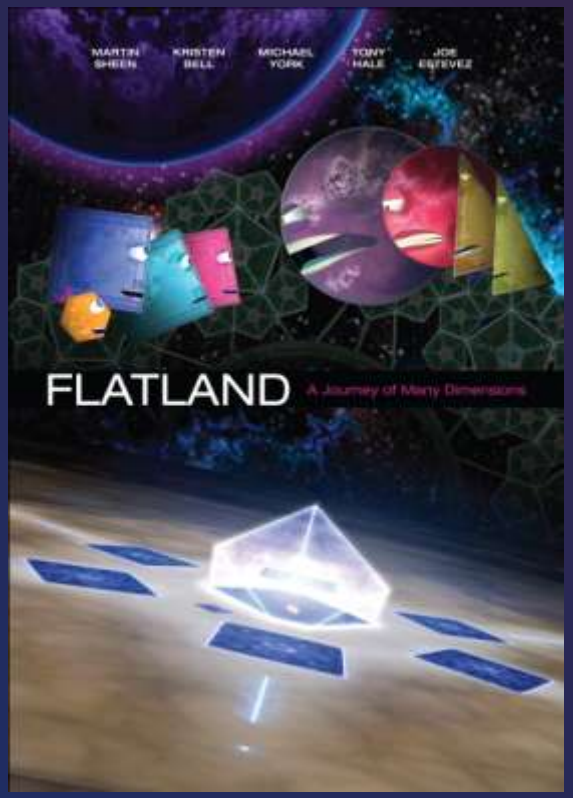
FLATLAND AND THE POWER OF STORY